ASB Heating Elements Ltd.

Pipe Insert Heater

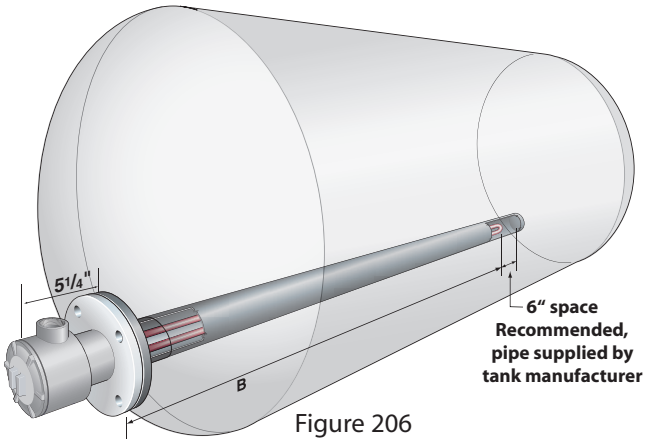

Figure 206

Pipe Insert Heaters offer you the advantages of direct immersion heat, and the ability to service the heater without draining the tank. The Incoloy sheathed element inside the pipe is carefully deigned for this application, and transfers its heat to the inside pipe wall by convection and radiation. The large surface area of the pipe in contact with your liquid greatly reduces the watt density (watts/in^2), making the pipe insert heaters ideally suited for heating:

- very viscous materials like Bunker C Fuel Oil,
- temperature sensitive materials like glucose, liquid sugar
- bulk storage of corrosive material

Pipe inside the tank supplied by the tank manufacturer

Low Liquid Protection

To prevent Low Liquid failure, one of multiple heaters should have a built-in thermocouple, series PFHK, and this heater must be mounted slightly higher than other heaters in the tank. When a Low Liquid event happens the air temperature inside the pipe rises dramatically and the thermocouple sends the temperature signal to your remote mounted high limit control for shutdown.

3" 150 psi flange mounting

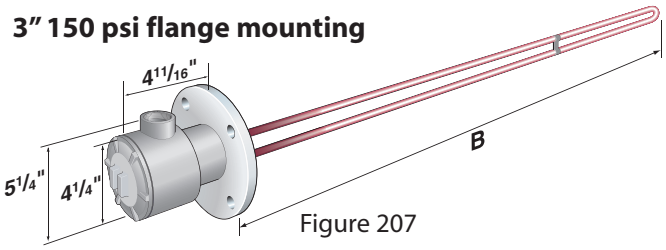

Figure 207

2" NPT screw plug mounting

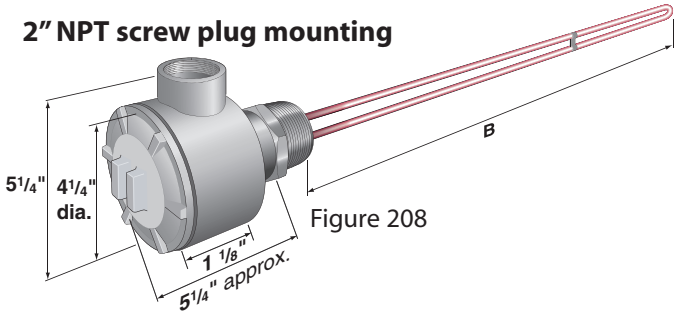

Figure 208

Incoloy element(s)
Up to 600 volts
(specifiy voltage when ordering)

Typically to heat:
asphalt, tar, starch, glucose, sugar,
large storage tanks, corrosive liquid

1 element 1phase

kw	**(B)** insert length (ft) into pipe	**catalogue number** Fig. 207 standard	Fig. 207 with "K" thermocouple	net weight (lb)
1	2 1/2	PFH-1001MR	PFHK-1001MR	15
2	4 1/2	PFH-1002MR	PFHK-1002MR	17
3	6 1/2	PFH-1003MR	PFHK-1003MR	19
4	8 1/2	PFH-1004MR	PFHK-1004MR	21
5	10 1/2	PFH-1005MR	PFHK-1005MR	23
6	12 1/2	PFH-1006MR	PFHK-1006MR	25
7	14 1/2	PFH-1007MR	PFHK-1007MR	27
8	16 1/2	PFH-1008MR	PFHK-1008MR	29
9	18 1/2	PFH-1009MR	PFHK-1009MR	31
10	20 1/2	PFH-1010MR	PFHK-1010MR	33
11	22 1/2	PFH-1011MR	PFHK-1011MR	35
12	24 1/2	PFH-1012MR	PFHK-1012MR	37
13	26 1/2	PFH-1013MR	PFHK-1013MR	39

3 elements (specify 1 or 3 phase)

kw	**(B)** insert length (ft) into pipe	**catalogue number** Fig. 207 standard	Fig. 207 with "K" thermocouple	net weight (lb)
2.0	2 1/2	PFH-3002MR	PFHK-3002MR	16
3.5	4 1/2	PFH-3003MR	PFHK-3003MR	18
5.0	6 1/2	PFH-3005MR	PFHK-3005MR	20
7.5	8 1/2	PFH-3007MR	PFHK-3007MR	22
9.5	10 1/2	PFH-3009MR	PFHK-3009MR	25
11	12 1/2	PFH-3011MR	PFHK-3011MR	27
13	14 1/2	PFH-3013MR	PFHK-3013MR	29
15	16 1/2	PFH-3015MR	PFHK-3015MR	31
17	18 1/2	PFH-3017MR	PFHK-3017MR	33
19	20 1/2	PFH-3019MR	PFHK-3019MR	35
21	22 1/2	PFH-3021MR	PFHK-3021MR	37
23	24 1/2	PFH-3023MR	PFHK-3023MR	39
25	26 1/2	PFH-3025MR	PFHK-3025MR	41

1 element 1phase

kw	**(B)** insert length (ft) into pipe	**catalogue number** Fig. 208 standard	Fig. 208 with "K" thermocouple	net weight (lb)
1	2 1/2	SPH-1001MR	SPHK-1001MR	8
2	4 1/2	SPH-1002MR	SPHK-1002MR	10
3	6 1/2	SPH-1003MR	SPHK-1003MR	12
4	8 1/2	SPH-1004MR	SPHK-1004MR	14
5	10 1/2	SPH-1005MR	SPHK-1005MR	16
6	11 1/2	SPH-1006MR	SPHK-1006MR	18

2 elements 1 phase

kw	**(B)** insert length (ft) into pipe	**catalogue number** Fig. 208 standard	Fig. 208 with "K" thermocouple	net weight (lb)
1.5	2 1/2	SPH-2001MR	SPHK-2001MR	9
3.0	4 1/2	SPH-2003MR	SPHK-2003MR	11
4.0	6 1/2	SPH-2004MR	SPHK-2004MR	13
6.0	8 1/2	SPH-2006MR	SPHK-2006MR	15
7.5	10 1/2	SPH-2007MR	SPHK-2007MR	17
8.5	11 1/2	SPH-2008MR	SPHK-2008MR	19

ASB Heating Elements Ltd.

Pipe Insert Heater

2 1/2" steel screw plug
Requires a 2 1/2" half coupling welded into tank
Includes pipe well, 2" NPT schedule 40 carbon steel pipe
Up to 600 volts
Optional "K" type High Limit Thermocouple
Optional Auto-reset High Limit
Weather Resistant terminal box
(specifiy voltage and 1 or 3 phase when ordering)

Typically to heat:
asphalt, tar, starch,
glucose, sugar
large storage tanks, corrosive liquid

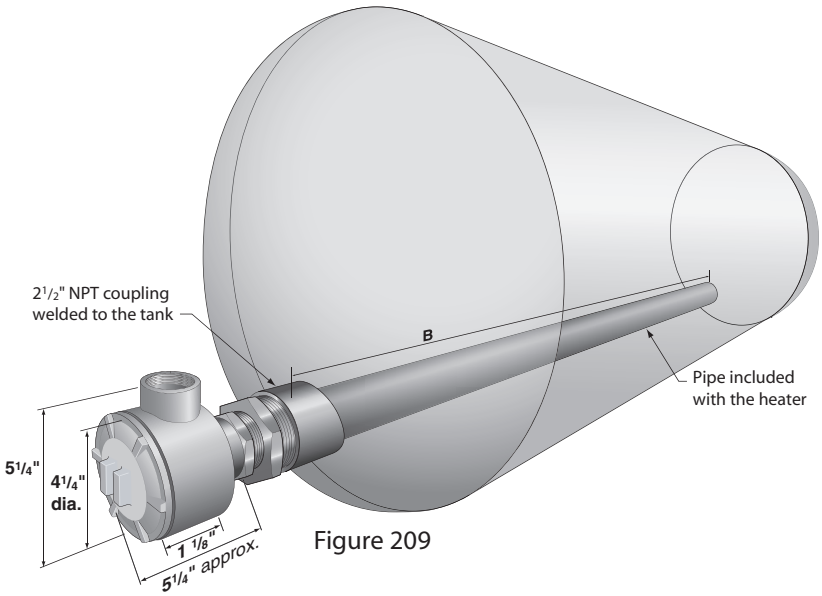

Figure 209

2 1/2" NPT screw plug mount (pipe included)

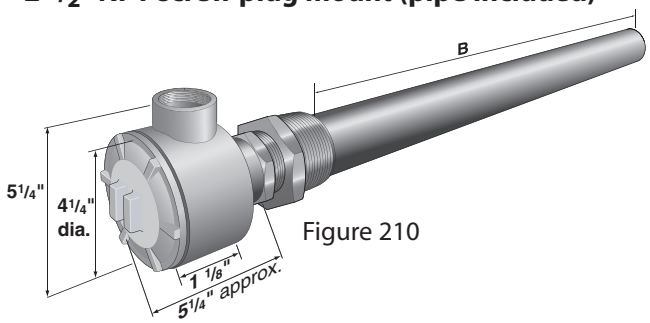

Figure 210

kw	immersed length (ft) B dim.	pipe watt density watt/in²	catalogue number Fig. 210 standard	Fig. 210 with "K" thermocouple	Fig. 210 with High Limit
1	2	5	SPA-2501MR	SPAK-2501MR	SPAHL-2501MR
2	2 1/2	8	SPA-2502MR	SPAK-2502MR	SPAHL-2502MR
3	3 1/2	10	SPA-2503MR	SPAK-2503MR	SPAHL-2503MR
4	4	11	SPA-2504MR	SPAK-2504MR	SPAHL-2504MR
5	4 3/4	11	SPA-2505MR	SPAK-2505MR	SPAHL-2505MR
6	5 1/2	12	SPA-2506MR	SPAK-2506MR	SPAHL-2506MR
7	6	12	SPA-2507MR	SPAK-2507MR	SPAHL-2507MR
8	6 3/4	13	SPA-2508MR	SPAK-2508MR	SPAHL-2508MR
9	7 1/2	13	SPA-2509MR	SPAK-2509MR	SPAHL-2509MR
10	8	13	SPA-2510MR	SPAK-2510MR	SPAHL-2510MR
11	9 3/4	12	SPA-2511MR	SPAK-2511MR	SPAHL-2511MR
12	9 1/2	13	SPA-2512MR	SPAK-2512MR	SPAHL-2512MR
13	10	14	SPA-2513MR	SPAK-2513MR	SPAHL-2513MR

Pipe Insert Heaters offer you the advantages of direct immersion heat, and the ability to service the heater without draining the tank. The Incoloy sheathed element inside the pipe is carefully deigned for this application, and transfers its heat to the inside pipe wall by convection and radiation. The large surface area of the pipe in contact with your liquid greatly reduces the watt density (watts/in^2), making the pipe insert heaters ideally suited for heating:

- very viscous materials like Bunker C Fuel Oil,
- temperature sensitive materials like glucose, liquid sugar
- bulk storage of corrosive material

SPA series pipe heaters come complete with a mild steel pipe well

Low Liquid Protection

To prevent Low Liquid failure, one of multiple heaters should have a built-in over heat protection. This heater must be mounted slightly higher than other heaters in the tank. When a Low Liquid event happens the air temperature inside the pipe rises dramatically.

Low Liquid Protection Options

1. Built in "K" thermocouple option, series SPAK.
2. Built in mechanical high limit control, series SPAHL. Typical temperature setting is 700°F (370°C). The standard control is a DPST 25amp, 240 VAC. An optional 600 volt, 15 amp TPST control is available.

The built in high limit control has no contact with the liquid you are heating and cannot be used as a thermostat to control your tank temperature.